Specifying and Verifying System Properties

Wolfgang Schreiner
Wolfgang.Schreiner@risc.jku.at

Research Institute for Symbolic Computation (RISC)
Johannes Kepler University, Linz, Austria
http://www.risc.jku.at

1. **The Basics of Temporal Logic**
2. Specifying with Linear Time Logic
3. Verifying Safety Properties by Computer-Supported Proving

Motivation

We need a language for specifying system properties.

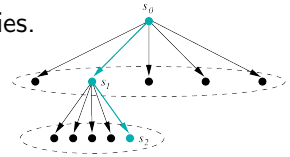

- A system S is a pair $\langle I, R \rangle$.
  - Initial states I, transition relation R.
  - More intuitive: reachability graph.
    - Starting from an initial state s_0, the system runs evolve.
- Consider the reachability graph as an infinite computation tree.
  - Different tree nodes may denote occurrences of the same state.
    - Each occurrence of a state has a unique predecessor in the tree.
  - Every path in this tree is infinite.
    - Every finite run $s_0 \rightarrow \ldots \rightarrow s_n$ is extended to an infinite run $s_0 \rightarrow \ldots \rightarrow s_n \rightarrow s_n \rightarrow s_n \rightarrow \ldots$
- Or simply consider the graph as a set of system runs.
  - Same state may occur multiple times (in one or in different runs).

Temporal logic describes such trees respectively sets of system runs.

Computation Trees versus System Runs

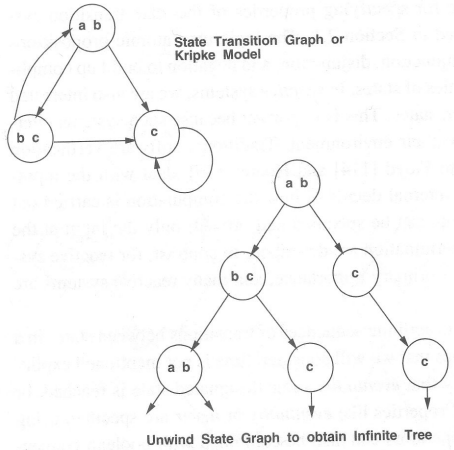

Figure 3.1
Computation trees.

Set of system runs:
$[a, b] \rightarrow c \rightarrow c \rightarrow \ldots$
$[a, b] \rightarrow [b, c] \rightarrow c \rightarrow \ldots$
$[a, b] \rightarrow [b, c] \rightarrow [a, b] \rightarrow \ldots$
$[a, b] \rightarrow [b, c] \rightarrow [a, b] \rightarrow \ldots$
$\ldots$

Edmund Clarke et al: "Model Checking", 1999.

State Formula

Temporal logic is based on classical logic.

- A state formula F is evaluated on a state s.
  - Any predicate logic formula is a state formula: $p(x), \neg F, F_0 \wedge F_1, F_0 \vee F_1, F_0 \Rightarrow F_1, F_0 \Leftrightarrow F_1, \forall x : F, \exists x : F$.
  - In propositional temporal logic only propositional logic formulas are state formulas (no quantification): $p, \neg F, F_0 \wedge F_1, F_0 \vee F_1, F_0 \Rightarrow F_1, F_0 \Leftrightarrow F_1$.
- Semantics: $s \models F$ ("F holds in state s").
  - Example: semantics of conjunction.
    - $(s \models F_0 \wedge F_1) \;:\Leftrightarrow\; (s \models F_0) \wedge (s \models F_1)$.
    - "$F_0 \wedge F_1$ holds in s if and only if F_0 holds in s and F_1 holds in s".

Classical logic reasoning on individual states.

Temporal Logic

Extension of classical logic to reason about multiple states.

- Temporal logic is an instance of modal logic.
  - Logic of "multiple worlds (situations)" that are in some way related.
  - Relationship may e.g. be a temporal one.
  - Amir Pnueli, 1977: temporal logic is suited to system specifications.
  - Many variants, two fundamental classes.
- Branching Time Logic
  - Semantics defined over computation trees.
    At each moment, there are multiple possible futures.
  - Prominent variant: CTL.
    Computation tree logic; a propositional branching time logic.
- Linear Time Logic
  - Semantics defined over sets of system runs.
    At each moment, there is only one possible future.
  - Prominent variant: PLTL.
    A propositional linear time logic.

Branching Time Logic (CTL)

We use temporal logic to specify a system property F.

- Core question: $S \models F$ ("F holds in system S").
  - System $S = \langle I, R \rangle$, temporal logic formula F.
- Branching time logic:
  - $S \models F \;:\Leftrightarrow\; S, s_0 \models F$, for every initial state s_0 of S.
  - Property F must be evaluated on every pair of system S and initial state s_0.
  - Given a computation tree with root s_0, F is evaluated on that tree.

CTL formulas are evaluated on computation trees.

State Formulas

We have additional state formulas.

- A state formula F is evaluated on state s of System S.
  - Every (classical) state formula f is such a state formula.
  - Let P denote a path formula (later).
    - Evaluated on a path (state sequence) $p = p_0 \rightarrow p_1 \rightarrow p_2 \rightarrow \ldots$.
      $R(p_i, p_{i+1})$ for every i; p_0 need not be an initial state.
  - Then the following are state formulas:
    A P ("in every path P"),
    E P ("in some path P").
  - Path quantifiers: **A**, **E**.
- Semantics: $S, s \models F$ ("F holds in state s of system S").
  $S, s \models f \;:\Leftrightarrow\; s \models f$.
  $S, s \models \mathbf{A}\ P \;:\Leftrightarrow\; S, p \models P$, for every path p of S with $p_0 = s$.
  $S, s \models \mathbf{E}\ P \;:\Leftrightarrow\; S, p \models P$, for some path p of S with $p_0 = s$.

Path Formulas

We have a class of formulas that are not evaluated over individual states.

- A path formula P is evaluated on a path p of system S.
  - Let F and G denote state formulas.
  - Then the following are path formulas:

    $\mathbf{X}\ F$ ("next time F"),
    $\mathbf{G}\ F$ ("always F"),
    $\mathbf{F}\ F$ ("eventually F"),
    $F\ \mathbf{U}\ G$ ("F until G").
  - Temporal operators: $\mathbf{X}, \mathbf{G}, \mathbf{F}, \mathbf{U}$.
- Semantics: $S, p \models P$ ("P holds in path p of system S").

$$S, p \models \mathbf{X}\ F \ :\Leftrightarrow S, p_1 \models F.$$
$$S, p \models \mathbf{G}\ F \ :\Leftrightarrow \forall i \in \mathbb{N} : S, p_i \models F.$$
$$S, p \models \mathbf{F}\ F \ :\Leftrightarrow \exists i \in \mathbb{N} : S, p_i \models F.$$
$$S, p \models F\ \mathbf{U}\ G \ :\Leftrightarrow \exists i \in \mathbb{N} : S, p_i \models G \wedge \forall j \in \mathbb{N}_i : S, p_j \models F.$$

Path Formulas

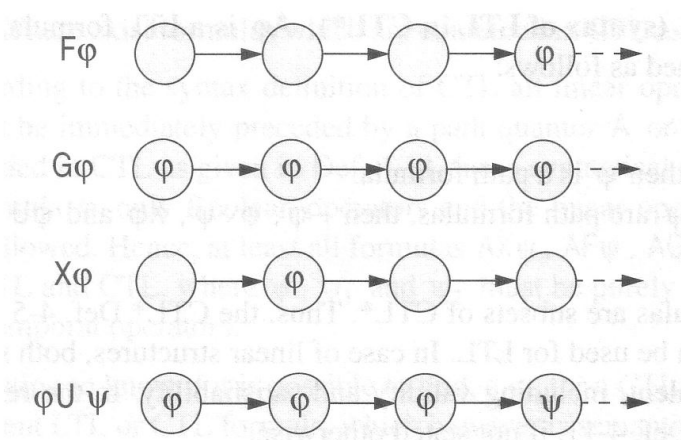

Thomas Kropf: "Introduction to Formal Hardware Verification", 1999.

Path Quantifiers and Temporal Operators

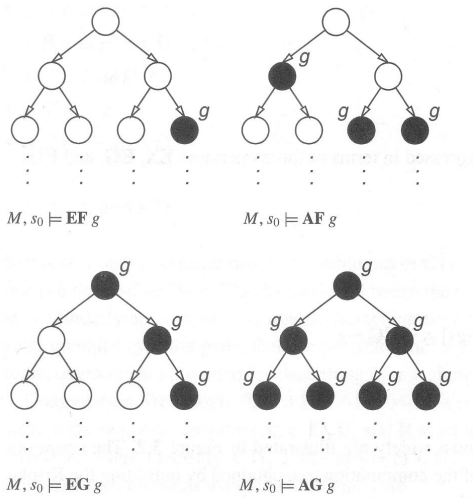

Edmund Clarke et al: "Model Checking", 1999.

Linear Time Logic (LTL)

We use temporal logic to specify a system property P.

- Core question: $S \models P$ ("P holds in system S").
  - System $S = \langle I, R \rangle$, temporal logic formula P.
- Linear time logic:
  - $S \models P \ :\Leftrightarrow\ r \models P$, for every run r of S.
  - Property P must be evaluated on every run r of S.
  - Given a computation tree with root s_0, P is evaluated on every path of that tree originating in s_0.
    - If P holds for every path, P holds on S.

LTL formulas are evaluated on system runs.

Formulas

No path quantifiers; all formulas are path formulas.

- Every formula is evaluated on a path p.
  - Also every state formula f of classical logic (see below).
  - Let F and G denote formulas.
  - Then also the following are formulas:
    - $\mathbf{X}\ F$ ("next time F"), often written $\bigcirc F$,
    - $\mathbf{G}\ F$ ("always F"), often written $\Box F$,
    - $\mathbf{F}\ F$ ("eventually F"), often written $\Diamond F$,
    - $F\ \mathbf{U}\ G$ ("F until G").
- Semantics: $p \models P$ ("P holds in path p").
  - $p^i := \langle p_i, p_{i+1}, \ldots \rangle$.

$$
\begin{aligned}
p \models f &:\Leftrightarrow p_0 \models f. \\
p \models \mathbf{X}\ F &:\Leftrightarrow p^1 \models F. \\
p \models \mathbf{G}\ F &:\Leftrightarrow \forall i \in \mathbb{N} : p^i \models F. \\
p \models \mathbf{F}\ F &:\Leftrightarrow \exists i \in \mathbb{N} : p^i \models F. \\
p \models F\ \mathbf{U}\ G &:\Leftrightarrow \exists i \in \mathbb{N} : p^i \models G \wedge \forall j \in \mathbb{N}_i : p^j \models F.
\end{aligned}
$$

Formulas

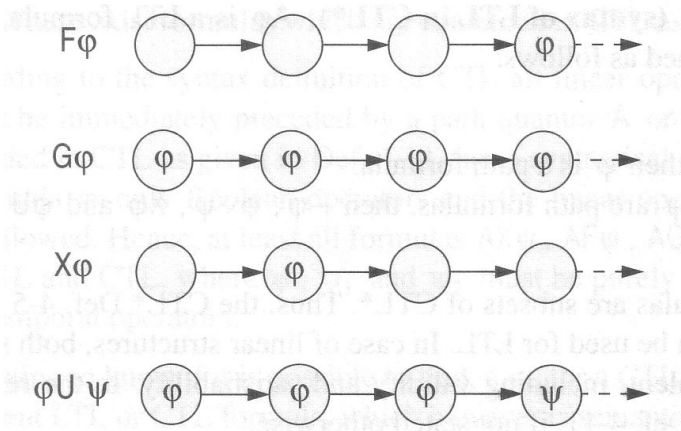

Thomas Kropf: "Introduction to Formal Hardware Verification", 1999.

Branching versus Linear Time Logic

We use temporal logic to specify a system property P.

- Core question: $S \models P$ ("P holds in system S").
  - System $S = \langle I, R \rangle$, temporal logic formula P.
- Branching time logic:
  - $S \models P \ :\Leftrightarrow\ S, s_0 \models P$, for every initial state s_0 of S.
  - Property P must be evaluated on every pair (S, s_0) of system S and initial state s_0.
  - Given a computation tree with root s_0, P is evaluated on that tree.
- Linear time logic:
  - $S \models P \ :\Leftrightarrow\ r \models P$, for every run r of s.
  - Property P must be evaluated on every run r of S.
  - Given a computation tree with root s_0, P is evaluated on every path of that tree originating in s_0.
    - If P holds for every path, P holds on S.

Branching versus Linear Time Logic

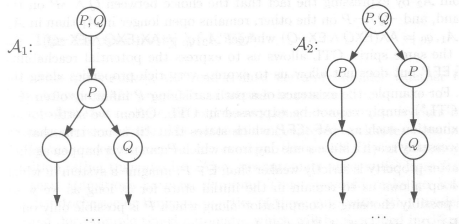

Fig. 2.4. Two automata, indistinguishable for PLTL

B. Berard et al: "Systems and Software Verification", 2001.

- Linear time logic: both systems have the same runs.
  - Thus every formula has same truth value in both systems.
- Branching time logic: the systems have different computation trees.
  - Take formula $\mathbf{AX}(\mathbf{EX}\ Q \wedge \mathbf{EX}\ \neg Q)$.
  - True for left system, false for right system.

The two variants of temporal logic have different expressive power.

Branching versus Linear Time Logic

Is one temporal logic variant more expressive than the other one?

- CTL formula: **AG**(**EF** F).
  - "In every run, it is at any time still possible that later F will hold".
  - Property cannot be expressed by any LTL logic formula.
- LTL formula: $\Diamond\Box F$ (i.e. **FG** F).
  - "In every run, there is a moment from which on F holds forever.".
  - Naive translation **AFG** F is not a CTL formula.
    - **G** F is a path formula, but **F** expects a state formula!
  - Translation **AFAG** F expresses a stronger property (see next page).
  - Property cannot be expressed by any CTL formula.

None of the two variants is strictly more expressive than the other one; no variant can express every system property.

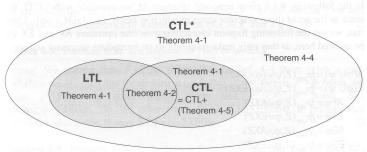

Fig. 4-8. Expressiveness of CTL*, CTL+, CTL and LTL

Thomas Kropf: "Introduction to Formal Hardware Verification", 1999.

Branching versus Linear Time Logic

Proof that **AFAG** F (CTL) is different from $\Diamond\Box F$ (LTL).

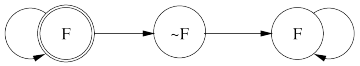

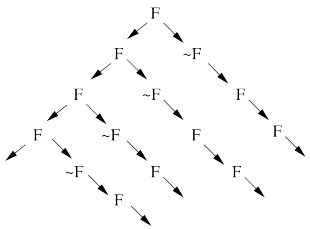

AFAG F <=> false

In every run, there is a moment when it is guarantueed that from now on F holds forever.

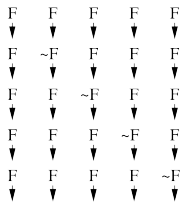

<>[] F <=> true

In every run, there is a moment from which on F holds forever.

Linear Time Logic

Why using linear time logic (LTL) for system specifications?

- LTL has many advantages:
  - LTL formulas are easier to understand.
    - Reasoning about computation paths, not computation trees.
    - No explicit path quantifiers used.
  - LTL can express most interesting system properties.
    - Invariance, guarantee, response, ... (see later).
  - LTL can express fairness constraints (see later).
    - CTL cannot do this.
    - But CTL can express that a state is reachable (which LTL cannot).
- LTL has also some disadvantages:
  - LTL is strictly less expressive than other specification languages.
    - CTL* or μ-calculus.
  - Asymptotic complexity of model checking is higher.
    - LTL: exponential in size of formula; CTL: linear in size of formula.
    - In practice the number of states dominates the checking time.

Frequently Used LTL Patterns

In practice, most temporal formulas are instances of particular patterns.

Pattern	Pronounced	Name
$\Box F$	always F	invariance
$\Diamond F$	eventually F	guarantee
$\Box\Diamond F$	F holds infinitely often	recurrence
$\Diamond\Box F$	eventually F holds permanently	stability
$\Box(F \Rightarrow \Diamond G)$	always, if F holds, then eventually G holds	response
$\Box(F \Rightarrow (G \mathbf{U} H))$	always, if F holds, then G holds until H holds	precedence

Typically, there are at most two levels of nesting of temporal operators.

Examples

- Mutual exclusion: $\Box\neg(pc_1 = C \wedge pc_2 = C)$.
  - Alternatively: $\neg\Diamond(pc_1 = C \wedge pc_2 = C)$.
  - Never both components are simultaneously in the critical region.
- No starvation: $\forall i : \Box(pc_i = W \Rightarrow \Diamond pc_i = R)$.
  - Always, if component i waits for a response, it eventually receives it.
- No deadlock: $\Box\neg\forall i : pc_i = W$.
  - Never all components are simultaneously in a wait state W.
- Precedence: $\forall i : \Box(pc_i \neq C \Rightarrow (pc_i \neq C \mathbf{U} lock = i))$.
  - Always, if component i is out of the critical region, it stays out until it receives the shared lock variable (which it eventually does).
- Partial correctness: $\Box(pc = L \Rightarrow C)$.
  - Always if the program reaches line L, the condition C holds.
- Termination: $\forall i : \Diamond(pc_i = T)$.
  - Every component eventually terminates.

Example

If event a occurs, then b must occur before c can occur (a run $\ldots, a, (\neg b)^*, c, \ldots$ is illegal).

- First idea (wrong)
  $a \Rightarrow \ldots$
  - Every run $d, \ldots$ becomes legal.
- Next idea (correct)
  $\Box(a \Rightarrow \ldots)$
- First attempt (wrong)
  $\Box(a \Rightarrow (b \mathbf{U} c))$
  - Run $a, b, \neg b, c, \ldots$ is illegal.
- Second attempt (better)
  $\Box(a \Rightarrow (\neg c \mathbf{U} b))$
  - Run $a, \neg c, \neg c, \neg c, \ldots$ is illegal.
- Third attempt (correct)
  $\Box(a \Rightarrow ((\Box\neg c) \vee (\neg c \mathbf{U} b)))$

Specifier has to think in terms of allowed/prohibited sequences.

Temporal Rules

Temporal operators obey a number of fairly intuitive rules.

- Extraction laws:
  - $\Box F \Leftrightarrow F \wedge \bigcirc\Box F$.
  - $\Diamond F \Leftrightarrow F \vee \bigcirc\Diamond F$.
  - $F \mathbf{U} G \Leftrightarrow G \vee (F \wedge \bigcirc(F \mathbf{U} G))$.
- Negation laws:
  - $\neg\Box F \Leftrightarrow \Diamond\neg F$.
  - $\neg\Diamond F \Leftrightarrow \Box\neg F$.
  - $\neg(F \mathbf{U} G) \Leftrightarrow ((\neg G) \mathbf{U} (\neg F \wedge \neg G)) \vee \neg\Diamond G$.
- Distributivity laws:
  - $\Box(F \wedge G) \Leftrightarrow (\Box F) \wedge (\Box G)$.
  - $\Diamond(F \vee G) \Leftrightarrow (\Diamond F) \vee (\Diamond G)$.
  - $(F \wedge G) \mathbf{U} H \Leftrightarrow (F \mathbf{U} H) \wedge (G \mathbf{U} H)$.
  - $F \mathbf{U} (G \vee H) \Leftrightarrow (F \mathbf{U} G) \vee (F \mathbf{U} H)$.
  - $\Box\Diamond(F \vee G) \Leftrightarrow (\Box\Diamond F) \vee (\Box\Diamond G)$.
  - $\Diamond\Box(F \wedge G) \Leftrightarrow (\Diamond\Box F) \wedge (\Diamond\Box G)$.

Classes of System Properties

There exists two important classes of system properties.

- Safety Properties:
  - A safety property is a property such that, if it is violated by a run, it is already violated by some finite prefix of the run.
    - This finite prefix cannot be extended in any way to a complete run satisfying the property.
  - Example: $\Box F$ (with state property F).
    - The violating run $F \to F \to \neg F \to \ldots$ has the prefix $F \to F \to \neg F$ that cannot be extended in any way to a run satisfying $\Box F$.
- Liveness Properties:
  - A liveness property is a property such that every finite prefix can be extended to a complete run satisfying this property.
    - Only a complete run itself can violate that property.
  - Example: $\Diamond F$ (with state property F).
    - Any finite prefix p can be extended to a run $p \to F \to \ldots$ which satisfies $\Diamond F$.

System Properties

Not every system property is itself a safety property or a liveness property.

- Example: $P :\Leftrightarrow (\Box A) \wedge (\Diamond B)$ (with state properties A and B)
  - Conjunction of a safety property and a liveness property.
- Take the run $[A, \neg B] \to [A, \neg B] \to [A, \neg B] \to \ldots$ violating P.
  - Any prefix $[A, \neg B] \to \ldots \to [A, \neg B]$ of this run can be extended to a run $[A, \neg B] \to \ldots \to [A, \neg B] \to [A, B] \to [A, B] \to \ldots$ satisfying P.
  - Thus P is not a safety property.
- Take the finite prefix $[\neg A, B]$.
  - This prefix cannot be extended in any way to a run satisfying P.
  - Thus P is not a liveness property.

So is the distinction "safety" versus "liveness" really useful?.

System Properties

The real importance of the distinction is stated by the following theorem.

- Theorem:

  Every system property P is a conjunction $S \wedge L$ of some safety property S and some liveness property L.

  - If L is "true", then P itself is a safety property.
  - If S is "true", then P itself is a liveness property.
- Consequence:
  - Assume we can decompose P into appropriate S and L.
  - For verifying $M \models P$, it then suffices to verify:
    - Safety: $M \models S$.
    - Liveness: $M \models L$.
  - Different strategies for verifying safety and liveness properties.

For verification, it is important to decompose a system property in its "safety part" and its "liveness part".

Verifying Safety

We only consider a special case of a safety property.

- $M \models \Box F$.
  - F is a state formula (a formula without temporal operator).
  - Verify that F is an invariant of system M.
- $M = \langle I, R \rangle$.
  - $I(s) :\Leftrightarrow \ldots$
  - $R(s, s') :\Leftrightarrow R_0(s, s') \vee R_1(s, s') \vee \ldots \vee R_{n-1}(s, s')$.
- Induction Proof.
  - $\forall s : I(s) \Rightarrow F(s)$.
    - Proof that F holds in every initial state.
  - $\forall s, s' : F(s) \wedge R(s, s') \Rightarrow F(s')$.
    - Proof that each transition preserves F.
    - Reduces to a number of subproofs:

      $F(s) \wedge R_0(s, s') \Rightarrow F(s')$

      $\ldots$

      $F(s) \wedge R_{n-1}(s, s') \Rightarrow F(s')$

Example

$$\begin{array}{l} \textbf{var } x := 0 \\ \textbf{loop} \\ \quad p_0 : \textbf{wait } x = 0 \\ \quad p_1 : x := x + 1 \end{array} \quad \| \quad \begin{array}{l} \textbf{loop} \\ \quad q_0 : \textbf{wait } x = 1 \\ \quad q_1 : x := x - 1 \end{array}$$

$State = \{p_0, p_1\} \times \{q_0, q_1\} \times \mathbb{Z}$.

$I(p, q, x) :\Leftrightarrow p = p_0 \wedge q = q_0 \wedge x = 0$.
$R(\langle p, q, x\rangle, \langle p', q', x'\rangle) :\Leftrightarrow P_0(\ldots) \vee P_1(\ldots) \vee Q_0(\ldots) \vee Q_1(\ldots)$.

$P_0(\langle p, q, x\rangle, \langle p', q', x'\rangle) :\Leftrightarrow p = p_0 \wedge x = 0 \wedge p' = p_1 \wedge q' = q \wedge x' = x$.
$P_1(\langle p, q, x\rangle, \langle p', q', x'\rangle) :\Leftrightarrow p = p_1 \wedge p' = p_0 \wedge q' = q \wedge x' = x + 1$.
$Q_0(\langle p, q, x\rangle, \langle p', q', x'\rangle) :\Leftrightarrow q = q_0 \wedge x = 1 \wedge p' = p \wedge q' = q_1 \wedge x' = x$.
$Q_1(\langle p, q, x\rangle, \langle p', q', x'\rangle) :\Leftrightarrow q = q_1 \wedge p' = p \wedge q' = q_0 \wedge x' = x - 1$.

Prove $\langle I, R\rangle \models \Box(x = 0 \vee x = 1)$.

Inductive System Properties

The induction strategy may not work for proving $\Box F$

- Problem: F is not inductive.
  - F is too weak to prove the induction step.
    - $F(s) \wedge R(s, s') \Rightarrow F(s')$.
- Solution: find stronger invariant I.
  - If $I \Rightarrow F$, then $(\Box I) \Rightarrow (\Box F)$.
  - It thus suffices to prove $\Box I$.
- Rationale: I may be inductive.
  - If yes, I is strong enough to prove the induction step.
    - $I(s) \wedge R(s, s') \Rightarrow I(s')$.
  - If not, find a stronger invariant I' and try again.
- Invariant I represents additional knowledge for every proof.
  - Rather than proving $\Box P$, prove $\Box(I \Rightarrow P)$.

The behavior of a system is captured by its strongest invariant.

Example

- Prove $\langle I, R\rangle \models \Box(x = 0 \vee x = 1)$.
  - Proof attempt fails.
- Prove $\langle I, R\rangle \models \Box G$.

  $G :\Leftrightarrow$
  $(x = 0 \vee x = 1) \wedge$
  $(p = p_1 \Rightarrow x = 0) \wedge$
  $(q = q_1 \Rightarrow x = 1)$.
  - Proof works.
  - $G \Rightarrow (x = 0 \vee x = 1)$ obvious.

See the proof presented in class.

Verifying Liveness

$$\begin{array}{l} \textbf{var } x := 0, y := 0 \\ \textbf{loop} \\ \quad x := x + 1 \end{array} \quad \| \quad \begin{array}{l} \textbf{loop} \\ \quad y := y + 1 \end{array}$$

$State = \mathbb{N} \times \mathbb{N}$; $Label = \{p, q\}$.
$I(x, y) :\Leftrightarrow x = 0 \wedge y = 0$.
$R(l, \langle x, y\rangle, \langle x', y'\rangle) :\Leftrightarrow$
$(l = p \wedge x' = x + 1 \wedge y' = y) \vee (l = q \wedge x' = x \wedge y' = y + 1)$.

- $\langle I, R\rangle \not\models \Diamond x = 1$.
  - $[x = 0, y = 0] \rightarrow [x = 0, y = 1] \rightarrow [x = 0, y = 2] \rightarrow \ldots$
  - This run violates (as the only one) $\Diamond x = 1$.
  - Thus the system as a whole does not satisfy $\Diamond x = 1$.

For verifying liveness properties, "unfair" runs have to be ruled out.

Enabling Condition

When is a particular transition enabled for execution?

- $Enabled_R(l, s) :\Leftrightarrow \exists t : R(l, s, t)$.
  - Labeled transition relation R, label l, state s.
  - Read: "Transition (with label) l is enabled in state s (w.r.t. R)".
- Example (previous slide):

$$
\begin{aligned}
& Enabled_R(p, \langle x, y\rangle) \\
& \quad \Leftrightarrow \exists x', y' : R(p, \langle x, y\rangle, \langle x', y'\rangle) \\
& \quad \Leftrightarrow \exists x', y' : \\
& \qquad (p = p \wedge x' = x + 1 \wedge y' = y) \vee \\
& \qquad (p = q \wedge x' = x \wedge y' = y + 1) \\
& \quad \Leftrightarrow (\exists x', y' : p = p \wedge x' = x + 1 \wedge y' = y) \vee \\
& \qquad (\exists x', y' : p = q \wedge x' = x \wedge y' = y + 1) \\
& \quad \Leftrightarrow \text{true} \vee \text{false} \\
& \quad \Leftrightarrow \text{true}.
\end{aligned}
$$

  - Transition p is always enabled.

Weak Fairness

- Weak Fairness
  - A run $s_0 \xrightarrow{l_0} s_1 \xrightarrow{l_1} s_2 \xrightarrow{l_2} \ldots$ is weakly fair to a transition l, if
    - if transition l is eventually permanently enabled in the run,
    - then transition l is executed infinitely often in the run.

      $(\exists i : \forall j \geq i : Enabled_R(l, s_j)) \Rightarrow (\forall i : \exists j \geq i : l_j = l)$.
  - The run in the previous example was not weakly fair to transition p.
- LTL formulas may explicitly specify weak fairness constraints.
  - Let E_l denote the enabling condition of transition l.
  - Let X_l denote the predicate "transition l is executed".
  - Define $WF_l :\Leftrightarrow (\Diamond\Box E_l) \Rightarrow (\Box\Diamond X_l)$.

    If l is eventually enabled forever, it is executed infinitely often.
  - Prove $\langle I, R\rangle \models (WF_l \Rightarrow P)$.

    Property P is only proved for runs that are weakly fair to l.

Alternatively, a model may also have weak fairness "built in".

Example

$State = \mathbb{N} \times \mathbb{N}$; $Label = \{p, q\}$.
$I(x, y) :\Leftrightarrow x = 0 \wedge y = 0$.
$R(l, \langle x, y\rangle, \langle x', y'\rangle) :\Leftrightarrow$
$\quad (l = p \wedge x' = x + 1 \wedge y' = y) \vee (l = q \wedge x' = x \wedge y' = y + 1)$.

- $\langle I, R\rangle \models \mathrm{WF}_p \Rightarrow \Diamond x = 1$.
  - $[x = 0, y = 0] \rightarrow [x = 0, y = 1] \rightarrow [x = 0, y = 2] \rightarrow \ldots$.
  - This (only) violating run is not weakly fair to transition p.
    - p is always enabled.
    - p is never executed.

System satisfies specification if weak fairness is assumed.

Strong Fairness

- Strong Fairness
  - A run $s_0 \xrightarrow{l_0} s_1 \xrightarrow{l_1} s_2 \xrightarrow{l_2} \ldots$ is strongly fair to a transition l, if
    - if l is infinitely often enabled in the run,
    - then l is also infinitely often executed the run.

      $(\forall i : \exists j \geq i : Enabled_R(l, s_j)) \Rightarrow (\forall i : \exists j \geq i : l_j = l)$.
  - If r is strongly fair to l, it is also weakly fair to l (but not vice versa).
- LTL formulas may explicitly specify strong fairness constraints.
  - Let E_l denote the enabling condition of transition l.
  - Let X_l denote the predicate "transition l is executed".
  - Define $SF_l :\Leftrightarrow (\Box\Diamond E_l) \Rightarrow (\Box\Diamond X_l)$.

    If l is enabled infinitely often, it is executed infinitely often.
  - Prove $\langle I, R\rangle \models (SF_l \Rightarrow P)$.

    Property P is only proved for runs that are strongly fair to l.

A much stronger requirement to the fairness of a system.

Example

var x=0
loop
  a : $x := -x$
  b : **choose** $x := 0$ [] $x := 1$

$State := \{a, b\} \times \mathbb{Z}; Label = \{A, B_0, B_1\}.$
$I(p, x) :\Leftrightarrow p = a \wedge x = 0.$
$R(l, \langle p, x\rangle, \langle p', x'\rangle) :\Leftrightarrow$
$(l = A \wedge (p = a \wedge p' = b \wedge x' = -x)) \vee$
$(l = B_0 \wedge (p = b \wedge p' = a \wedge x' = 0)) \vee$
$(l = B_1 \wedge (p = b \wedge p' = a \wedge x' = 1)).$

- $\langle I, R\rangle \models \mathrm{SF}_{B_1} \Rightarrow \Diamond x = 1.$
  - $[a, 0] \xrightarrow{A} [b, 0] \xrightarrow{B_0} [a, 0] \xrightarrow{A} [b, 0] \xrightarrow{B_0} [a, 0] \xrightarrow{A} \ldots$
  - This (only) violating run is not strongly fair to B_1 (but weakly fair).
    - B_1 is infinitely often enabled.
    - B_1 is never executed.

System satisfies specification if strong fairness is assumed.

Weak versus Strong Fairness

In which situations is which notion of fairness appropriate?

- Process just waits to be scheduled for execution.
  - Only CPU time is required.
  - Weak fairness suffices.
- Process waits for resource that may be temporarily blocked.
  - Critical region protected by lock variable (mutex/semaphore).
  - Strong fairness is required.
- Non-deterministic choices are repeatedly made in program.
  - Simultaneous listing on multiple communication channels.
  - Strong fairness is required.

Many other notions or fairness exist.

A Bit Transmission Protocol

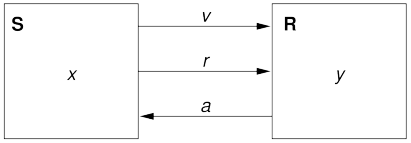

var x, y
var $v := 0, r := 0, a := 0$

S: **loop**		R: **loop**
choose $x \in \{0, 1\}$	$\|\|$	1 : **wait** $r = 1$
1 : $v, r := x, 1$		$y, a := v, 1$
2 : **wait** $a = 1$		2 : **wait** $r = 0$
$r := 0$		$a := 0$
3 : **wait** $a = 0$		

Transmit a sequence of bits through a wire.

A (Simplified) Model of the Protocol

$State := PC^2 \times (\mathbb{N}_2)^5$

$I(p,q,x,y,v,r,a) :\Leftrightarrow p = q = 1 \wedge x \in \mathbb{N}_2 \wedge v = r = a = 0.$
$R(\langle p,q,x,y,v,r,a\rangle, \langle p',q',x',y',v',r',a'\rangle) :\Leftrightarrow$
$\quad S1(\ldots) \vee S2(\ldots) \vee S3(\ldots) \vee R1(\ldots) \vee R2(\ldots).$

$S1(\langle p,q,x,y,v,r,a\rangle, \langle p',q',x',y',v',r',a'\rangle) :\Leftrightarrow$
$\quad p = 1 \wedge p' = 2 \wedge v' = x \wedge r' = 1 \wedge$
$\quad q' = q \wedge x' = x \wedge y' = y \wedge a' = a.$
$S2(\langle p,q,x,y,v,r,a\rangle, \langle p',q',x',y',v',r',a'\rangle) :\Leftrightarrow$
$\quad p = 2 \wedge p' = 3 \wedge a = 1 \wedge r' = 0 \wedge$
$\quad q' = q \wedge x' = x \wedge y' = y \wedge v' = v \wedge a' = a.$
$S3(\langle p,q,x,y,v,r,a\rangle, \langle p',q',x',y',v',r',a'\rangle) :\Leftrightarrow$
$\quad p = 3 \wedge p' = 1 \wedge a = 0 \wedge x' \in \mathbb{N}_2 \wedge$
$\quad q' = q \wedge y' = y \wedge v' = v \wedge r' = r \wedge a' = a.$
$R1(\langle p,q,x,y,v,r,a\rangle, \langle p',q',x',y',v',r',a'\rangle) :\Leftrightarrow$
$\quad q = 1 \wedge q' = 2 \wedge r = 1 \wedge y' = v \wedge a' = 1 \wedge$
$\quad p' = p \wedge x' = x \wedge v' = v \wedge r' = r.$
$R2(\langle p,q,x,y,v,r,a\rangle, \langle p',q',x',y',v',r',a'\rangle) :\Leftrightarrow$
$\quad q = 2 \wedge q' = 1 \wedge r = 0 \wedge a' = 0 \wedge$
$\quad p' = p \wedge x' = x \wedge y' = y \wedge v' = v \wedge r' = r.$

A Verification Task

$\langle I, R\rangle \models \Box(q = 2 \Rightarrow y = x)$

$Invariant(p,\ldots) \Rightarrow (q = 2 \Rightarrow y = x)$

$I(p,\ldots) \Rightarrow Invariant(p,\ldots)$
$R(\langle p,\ldots\rangle, \langle p',\ldots\rangle) \wedge Invariant(p,\ldots) \Rightarrow Invariant(p',\ldots)$

$Invariant(p,q,x,y,v,r,a) :\Leftrightarrow$
$\quad (p = 1 \vee p = 2 \vee p = 3) \wedge (q = 1 \vee q = 2) \wedge$
$\quad (x = 0 \vee x = 1) \wedge (v = 0 \vee v = 1) \wedge (r = 0 \vee r = 1) \wedge (a = 0 \vee a = 1) \wedge$
$\quad (p = 1 \Rightarrow q = 1 \wedge r = 0 \wedge a = 0) \wedge$
$\quad (p = 2 \Rightarrow r = 1 \wedge v = x) \wedge$
$\quad (p = 3 \Rightarrow r = 0) \wedge$
$\quad (q = 1 \Rightarrow a = 0) \wedge$
$\quad (q = 2 \Rightarrow (p = 2 \vee p = 3) \wedge a = 1 \wedge y = x)$

The invariant captures the essence of the protocol.

The RISC ProofNavigator Theory

```
newcontext "protocol";

p: NAT; q: NAT; x: NAT; y: NAT; v: NAT; r: NAT; a: NAT;
p0: NAT; q0: NAT; x0: NAT; y0: NAT; v0: NAT; r0: NAT; a0: NAT;

S1: BOOLEAN =
  p = 1 AND p0 = 2 AND v0 = x AND r0 = 1 AND
  q0 = q AND x0 = x AND y0 = y AND a0 = a;
S2: BOOLEAN =
  p = 2 AND p0 = 3 AND a = 1 AND r0 = 0 AND
  q0 = q AND x0 = x AND y0 = y AND v0 = v AND a0 = a;
S3: BOOLEAN =
  p = 3 AND p0 = 1 AND a = 0 AND (x0 = 0 OR x0 = 1) AND
  q0 = q AND y0 = y AND v0 = v AND r0 = r AND a0 = a;

R1: BOOLEAN =
  q = 1 AND q0 = 2 AND r = 1 AND y0 = v AND a0 = 1 AND
  p0 = p AND x0 = x AND v0 = v AND r0 = r;
R2: BOOLEAN =
  q = 2 AND q0 = 1 AND r = 0 AND a0 = 0 AND
  p0 = p AND x0 = x AND y0 = y AND v0 = v AND r0 = r;
```


The RISC ProofNavigator Theory

```
Init: BOOLEAN =
  p = 1 AND q = 1 AND (x = 0 OR x = 1) AND
  v = 0 AND r = 0 AND a = 0;

Step: BOOLEAN =
  S1 OR S2 OR S3 OR R1 OR R2;

Invariant: (NAT, NAT, NAT, NAT, NAT, NAT, NAT)->BOOLEAN =
  LAMBDA(p, q, x, y, v, r, a: NAT):
    (p = 1 OR p = 2 OR p = 3) AND
    (q = 1 OR q = 2) AND
    (x = 0 OR x = 1) AND
    (v = 0 OR v = 1) AND
    (r = 0 OR r = 1) AND
    (a = 0 OR a = 1) AND
    (p = 1 => q = 1 AND r = 0 AND a = 0) AND
    (p = 2 => r = 1 AND v = x) AND
    (p = 3 => r = 0) AND
    (q = 1 => a = 0) AND
    (q = 2 => (p = 2 OR p = 3) AND a = 1 AND y = x);
```

The RISC ProofNavigator Theory

```
Property: BOOLEAN =
  q = 2 => y = x;

VC0: FORMULA
  Invariant(p, q, x, y, v, r, a) => Property;

VC1: FORMULA
  Init => Invariant(p, q, x, y, v, r, a);

VC2: FORMULA
  Step AND Invariant(p, q, x, y, v, r, a) =>
    Invariant(p0, q0, x0, y0, v0, r0, a0);
```


The Proofs

```
[vd2]: expand Invariant, Property in m2v
  [rle]: proved (CVCL)

[wd2]: expand Init, Invariant in nra
  [ipl]: proved(CVCL)

[xd2]: expand Step, Invariant, S1, S2, S3, R1, R2
  [6ss]: proved(CVCL)
```

More instructive: proof attempts with wrong or too weak invariants (see demonstration).

A Client/Server System

Client system $C_i = \langle IC_i, RC_i \rangle$.

$State := PC \times \mathbb{N}_2 \times \mathbb{N}_2$.
$Int := \{R_i, S_i, C_i\}$.

$IC_i(pc, request, answer) :\Leftrightarrow$
$\quad pc = R \wedge request = 0 \wedge answer = 0.$

$RC_i(I, \langle pc, request, answer \rangle,$
$\quad \langle pc', request', answer' \rangle) :\Leftrightarrow$
$\quad (I = R_i \wedge pc = R \wedge request = 0 \wedge$
$\quad\quad pc' = S \wedge request' = 1 \wedge answer' = answer) \vee$
$\quad (I = S_i \wedge pc = S \wedge answer \neq 0 \wedge$
$\quad\quad pc' = C \wedge request' = request \wedge answer' = 0) \vee$
$\quad (I = C_i \wedge pc = C \wedge request = 0 \wedge$
$\quad\quad pc' = R \wedge request' = 1 \wedge answer' = answer) \vee$

$\quad (I = \overline{REQ_i} \wedge request \neq 0 \wedge$
$\quad\quad pc' = pc \wedge request' = 0 \wedge answer' = answer) \vee$
$\quad (I = ANS_i \wedge$
$\quad\quad pc' = pc \wedge request' = request \wedge answer' = 1).$

```
Client(ident):
  param ident
begin
  loop
    ...
 R: sendRequest()
 S: receiveAnswer()
 C: // critical region
    ...
    sendRequest()
  endloop
end Client
```


A Client/Server System (Contd)

Server system $S = \langle IS, RS \rangle$.

$State := (\mathbb{N}_3)^3 \times (\{1,2\} \to \mathbb{N}_2)^2$.
$Int := \{D1, D2, F, A1, A2, W\}$.

$IS(given, waiting, sender, rbuffer, sbuffer) :\Leftrightarrow$
$\quad given = waiting = sender = 0 \wedge$
$\quad rbuffer(1) = rbuffer(2) = sbuffer(1) = sbuffer(2) = 0.$

$RS(I, \langle given, waiting, sender, rbuffer, sbuffer \rangle,$
$\quad \langle given', waiting', sender', rbuffer', sbuffer' \rangle) :\Leftrightarrow$
$\quad \exists i \in \{1,2\} :$
$\quad\quad (I = D_i \wedge sender = 0 \wedge rbuffer(i) \neq 0 \wedge$
$\quad\quad sender' = i \wedge rbuffer'(i) = 0 \wedge$
$\quad\quad U(given, waiting, sbuffer) \wedge$
$\quad\quad \forall j \in \{1,2\} \backslash \{i\} : U_j(rbuffer)) \vee$
$\quad \ldots$

$U(x_1, \ldots, x_n) :\Leftrightarrow x_1' = x_1 \wedge \ldots \wedge x_n' = x_n.$
$U_j(x_1, \ldots, x_n) :\Leftrightarrow x_1'(j) = x_1(j) \wedge \ldots \wedge x_n'(j) = x_n(j).$

```
Server:
  local given, waiting, sender
begin
  given := 0; waiting := 0
  loop
D:  sender := receiveRequest()
    if sender = given then
      if waiting = 0 then
F:      given := 0
      else
A1:     given := waiting;
        waiting := 0
        sendAnswer(given)
      endif
    elsif given = 0 then
A2:   given := sender
      sendAnswer(given)
    else
W:    waiting := sender
    endif
  endloop
end Server
```

A Client/Server System (Contd'2)

$$
\begin{aligned}
&\ldots\\
&(I = F \wedge sender \neq 0 \wedge sender = given \wedge waiting = 0 \wedge\\
&\quad given' = 0 \wedge sender' = 0 \wedge\\
&\quad U(waiting, rbuffer, sbuffer)) \vee\\
&(I = A1 \wedge sender \neq 0 \wedge sbuffer(waiting) = 0 \wedge\\
&\quad sender = given \wedge waiting \neq 0 \wedge\\
&\quad given' = waiting \wedge waiting' = 0 \wedge\\
&\quad sbuffer'(waiting) = 1 \wedge sender' = 0 \wedge\\
&\quad U(rbuffer) \wedge\\
&\quad \forall j \in \{1,2\} \backslash \{waiting\} : U_j(sbuffer)) \vee\\
&(I = A2 \wedge sender \neq 0 \wedge sbuffer(sender) = 0 \wedge\\
&\quad sender \neq given \wedge given = 0 \wedge\\
&\quad given' = sender \wedge\\
&\quad sbuffer'(sender) = 1 \wedge sender' = 0 \wedge\\
&\quad U(waiting, rbuffer) \wedge\\
&\quad \forall j \in \{1,2\} \backslash \{sender\} : U_j(sbuffer)) \vee\\
&\ldots
\end{aligned}
$$

```
Server:
  local given, waiting, sender
begin
  given := 0; waiting := 0
  loop
D:  sender := receiveRequest()
    if sender = given then
      if waiting = 0 then
F:      given := 0
      else
A1:     given := waiting;
        waiting := 0
        sendAnswer(given)
      endif
    elsif given = 0 then
A2:   given := sender
      sendAnswer(given)
    else
W:    waiting := sender
    endif
  endloop
end Server
```


A Client/Server System (Contd'3)

$$
\begin{aligned}
&\ldots\\
&(I = W \wedge sender \neq 0 \wedge sender \neq given \wedge given \neq 0 \wedge\\
&\quad waiting' := sender \wedge sender' = 0 \wedge\\
&\quad U(given, rbuffer, sbuffer)) \vee
\end{aligned}
$$

$$
\begin{aligned}
&\exists i \in \{1,2\} :\\
&\quad (I = REQ_i \wedge rbuffer'(i) = 1 \wedge\\
&\quad\quad U(given, waiting, sender, sbuffer) \wedge\\
&\quad\quad \forall j \in \{1,2\} \backslash \{i\} : U_j(rbuffer)) \vee\\
&\quad (I = \overline{ANS_i} \wedge sbuffer(i) \neq 0 \wedge\\
&\quad\quad sbuffer'(i) = 0 \wedge\\
&\quad\quad U(given, waiting, sender, rbuffer) \wedge\\
&\quad\quad \forall j \in \{1,2\} \backslash \{i\} : U_j(sbuffer)).
\end{aligned}
$$

```
Server:
  local given, waiting, sender
begin
  given := 0; waiting := 0
  loop
D:  sender := receiveRequest()
    if sender = given then
      if waiting = 0 then
F:      given := 0
      else
A1:     given := waiting;
        waiting := 0
        sendAnswer(given)
      endif
    elsif given = 0 then
A2:   given := sender
      sendAnswer(given)
    else
W:    waiting := sender
    endif
  endloop
end Server
```


A Client/Server System (Contd'4)

$$State := (\{1,2\} \to PC) \times (\{1,2\} \to \mathbb{N}_2)^2 \times (\mathbb{N}_3)^2 \times (\{1,2\} \to \mathbb{N}_2)^2$$

$$
\begin{aligned}
&I(pc, request, answer, given, waiting, sender, rbuffer, sbuffer) :\Leftrightarrow\\
&\quad \forall i \in \{1,2\} : IC(pc_i, request_i, answer_i) \wedge\\
&\quad IS(given, waiting, sender, rbuffer, sbuffer)
\end{aligned}
$$

$$
\begin{aligned}
&R(\langle pc, request, answer, given, waiting, sender, rbuffer, sbuffer\rangle,\\
&\quad \langle pc', request', answer', given', waiting', sender', rbuffer', sbuffer'\rangle) :\Leftrightarrow\\
&\quad (\exists i \in \{1,2\} : RC_{local}(\langle pc_i, request_i, answer_i\rangle, \langle pc'_i, request'_i, answer'_i\rangle) \wedge\\
&\quad\quad \langle given, waiting, sender, rbuffer, sbuffer\rangle =\\
&\quad\quad\quad \langle given', waiting', sender', rbuffer', sbuffer'\rangle) \vee\\
&\quad (RS_{local}(\langle given, waiting, sender, rbuffer, sbuffer\rangle,\\
&\quad\quad\quad \langle given', waiting', sender', rbuffer', sbuffer'\rangle) \wedge\\
&\quad\quad \forall i \in \{1,2\} : \langle pc_i, request_i, answer_i\rangle = \langle pc'_i, request'_i, answer'_i\rangle) \vee\\
&\quad (\exists i \in \{1,2\} : External(i, \langle request_i, answer_i, rbuffer, sbuffer\rangle,\\
&\quad\quad\quad \langle request'_i, answer'_i, rbuffer', sbuffer'\rangle) \wedge\\
&\quad\quad pc = pc' \wedge \langle sender, waiting, given\rangle = \langle sender', waiting', given'\rangle)
\end{aligned}
$$

The Verification Task

$$\langle I, R\rangle \models \Box\neg(pc_1 = C \wedge pc_2 = C)$$

$$
\begin{aligned}
&Invariant(pc, request, answer, sender, given, waiting, rbuffer, sbuffer) :\Leftrightarrow\\
&\quad \forall i \in \{1,2\} :\\
&\quad\quad (pc(i) = C \vee sbuffer(i) = 1 \vee answer(i) = 1 \Rightarrow\\
&\quad\quad\quad given = i \wedge\\
&\quad\quad\quad \forall j : j \neq i \Rightarrow pc(j) \neq C \wedge sbuffer(j) = 0 \wedge answer(j) = 0) \wedge\\
&\quad\quad (pc(i) = R \Rightarrow\\
&\quad\quad\quad sbuffer(i) = 0 \wedge answer(i) = 0 \wedge\\
&\quad\quad\quad (i = given \Leftrightarrow request(i) = 1 \vee rbuffer(i) = 1 \vee sender = i) \wedge\\
&\quad\quad\quad (request(i) = 0 \vee rbuffer(i) = 0)) \wedge\\
&\quad\quad (pc(i) = S \Rightarrow\\
&\quad\quad\quad (sbuffer(i) = 1 \vee answer(i) = 1 \Rightarrow\\
&\quad\quad\quad\quad request(i) = 0 \wedge rbuffer(i) = 0 \wedge sender \neq i) \wedge\\
&\quad\quad\quad (i \neq given \Rightarrow\\
&\quad\quad\quad\quad request(i) = 0 \vee rbuffer(i) = 0)) \wedge\\
&\quad\quad (pc(i) = C \Rightarrow\\
&\quad\quad\quad request(i) = 0 \wedge rbuffer(i) = 0 \wedge sender \neq i \wedge\\
&\quad\quad\quad sbuffer(i) = 0 \wedge answer(i) = 0) \wedge\\
&\quad\quad \ldots
\end{aligned}
$$

The Verification Task (Contd)

$$
\begin{array}{l}
\ldots \\
(sender = 0 \wedge (request(i) = 1 \vee rbuffer(i) = 1) \Rightarrow \\
\quad sbuffer(i) = 0 \wedge answer(i) = 0) \wedge \\
(sender = i \Rightarrow \\
\quad (waiting \neq i) \wedge \\
\quad (sender = given \wedge pc(i) = R \Rightarrow \\
\qquad request(i) = 0 \wedge rbuffer(i) = 0) \wedge \\
\quad (pc(i) = S \wedge i \neq given \Rightarrow \\
\qquad request(i) = 0 \wedge rbuffer(i) = 0) \wedge \\
\quad (pc(i) = S \wedge i = given \Rightarrow \\
\qquad request(i) = 0 \vee rbuffer(i) = 0)) \wedge \\
(waiting = i \Rightarrow \\
\quad given \neq i \wedge pc_i = S \wedge request_i = 0 \wedge rbuffer(i) = 0 \wedge \\
\quad sbuffer_i = 0 \wedge answer(i) = 0) \wedge \\
(sbuffer(i) = 1 \Rightarrow \\
\quad answer(i) = 0 \wedge request(i) = 0 \wedge rbuffer(i) = 0)
\end{array}
$$

As usual, the invariant has been elaborated in the course of the proof.

The RISC ProofNavigator Theory

```
newcontext "clientServer";

Index: TYPE = SUBTYPE(LAMBDA(x:INT): x=1 OR x=2);
Index0: TYPE = SUBTYPE(LAMBDA(x:INT): x=0 OR x=1 OR x=2);

% program counter type
PCBASE: TYPE;
R: PCBASE; S: PCBASE; C: PCBASE;
PC: TYPE = SUBTYPE(LAMBDA(x:PCBASE): x=R OR x=S OR x=C);
PCs: AXIOM R /= S AND R /= C AND S /= C;

% client states
pc: Index->PC; pc0: Index->PC;
request: Index->BOOLEAN; request0: Index->BOOLEAN;
answer: Index->BOOLEAN; answer0: Index->BOOLEAN;

% server state
given: Index0; given0: Index0;
waiting: Index0; waiting0: Index0;
sender: Index0; sender0: Index0;
rbuffer: Index -> BOOLEAN; rbuffer0: Index -> BOOLEAN;
sbuffer: Index -> BOOLEAN; sbuffer0: Index -> BOOLEAN;
```


The RISC ProofNavigator Theory (Contd)

```
% ------------------------------------------------------------------
% initial state condition
% ------------------------------------------------------------------

IC: (PC, BOOLEAN, BOOLEAN) -> BOOLEAN =
  LAMBDA(pc: PC, request: BOOLEAN, answer: BOOLEAN):
    pc = R AND (request <=> FALSE) AND (answer <=> FALSE);

IS: (Index0, Index0, Index0, Index->BOOLEAN, Index->BOOLEAN) -> BOOLEAN =
  LAMBDA(given: Index0, waiting: Index0, sender: Index0,
         rbuffer: Index->BOOLEAN, sbuffer: Index->BOOLEAN):
    given = 0 AND waiting = 0 AND sender = 0 AND
    (FORALL(i:Index): (rbuffer(i)<=>FALSE) AND (sbuffer(i)<=>FALSE));

Initial: BOOLEAN =
  (FORALL(i:Index): IC(pc(i), request(i), answer(i))) AND
  IS(given, waiting, sender, rbuffer, sbuffer);
```


The RISC ProofNavigator Theory (Contd'2)

```
% ------------------------------------------------------------------
% transition relation
% ------------------------------------------------------------------

RC: (PC, BOOLEAN, BOOLEAN, PC, BOOLEAN, BOOLEAN)->BOOLEAN =
  LAMBDA(pc: PC, request: BOOLEAN, answer: BOOLEAN,
         pc0: PC, request0: BOOLEAN, answer0: BOOLEAN):
    (pc = R AND (request <=> FALSE) AND
       pc0 = S AND (request0 <=> TRUE) AND (answer0 <=> answer)) OR
    (pc = S AND (answer <=> TRUE) AND
       pc0 = C AND (request0 <=> request) AND (answer0 <=> FALSE)) OR
    (pc = C AND (request <=> FALSE) AND
       pc0 = R AND (request0 <=> TRUE) AND (answer0 <=> answer));

RS: (Index0, Index0, Index0, Index->BOOLEAN, Index->BOOLEAN,
     Index0, Index0, Index0, Index->BOOLEAN, Index->BOOLEAN)->BOOLEAN =
  LAMBDA(given: Index0, waiting: Index0, sender: Index0,
         rbuffer: Index->BOOLEAN, sbuffer: Index->BOOLEAN,
         given0: Index0, waiting0: Index0, sender0: Index0,
         rbuffer0: Index->BOOLEAN, sbuffer0: Index->BOOLEAN):
```

The RISC ProofNavigator Theory (Contd'3)

```
(EXISTS(i:Index):
    sender = 0 AND (rbuffer(i) <=> TRUE) AND
    sender0 = i AND (rbuffer0(i) <=> FALSE) AND
    given = given0 AND waiting = waiting0 AND sbuffer = sbuffer0 AND
    (FORALL(j:Index): j /= i => (rbuffer(j) <=> rbuffer0(j)))) OR
 (sender /= 0 AND sender = given AND waiting = 0 AND
    given0 = 0 AND sender0 = 0 AND
    waiting = waiting0 AND rbuffer = rbuffer0 AND sbuffer = sbuffer0) OR
 (sender /= 0 AND
    sender = given AND waiting /= 0 AND
    (sbuffer(waiting) <=> FALSE) AND
    given0 = waiting AND waiting0 = 0 AND
    (sbuffer0(waiting)<=>TRUE) AND (sender0 = 0) AND
    (rbuffer = rbuffer0) AND
    (FORALL(j:Index): j /= waiting => (sbuffer(j) <=> sbuffer0(j)))) OR
 (sender /= 0 AND (sbuffer(sender) <=> FALSE) AND
    sender /= given AND given = 0 AND given0 = sender AND
    (sbuffer0(sender)<=>TRUE) AND sender0=0 AND
    (waiting=waiting0) AND (rbuffer=rbuffer0) AND
    (FORALL(j:Index): j/= sender => (sbuffer(j) <=> sbuffer0(j)))) OR
 (sender /= 0 AND sender /= given AND given /= 0 AND
    waiting0 = sender AND sender0 = 0 AND
    given = given0 AND rbuffer = rbuffer0 AND sbuffer = sbuffer0);
```


The RISC ProofNavigator Theory (Contd'4)

```
External: (Index, PC, BOOLEAN, BOOLEAN, PC, BOOLEAN, BOOLEAN,
           Index0, Index0, Index0, Index->BOOLEAN, Index->BOOLEAN,
           Index0, Index0, Index0, Index->BOOLEAN, Index->BOOLEAN)->BOOLEAN =
  LAMBDA(i:Index,
         pc: PC, request: BOOLEAN, answer: BOOLEAN,
         pc0: PC, request0: BOOLEAN, answer0: BOOLEAN,
         given: Index0, waiting: Index0, sender: Index0,
           rbuffer: Index->BOOLEAN, sbuffer: Index->BOOLEAN,
         given0: Index0, waiting0: Index0, sender0: Index0,
           rbuffer0: Index->BOOLEAN, sbuffer0: Index->BOOLEAN):
    ((request <=> TRUE) AND
       pc0 = pc AND (request0 <=> FALSE) AND (answer0 <=> answer) AND
         (rbuffer0(i) <=> TRUE) AND given = given0 AND waiting = waiting0
         AND sender = sender0 AND sbuffer = sbuffer0 AND
         (FORALL (j: Index): j /= i => (rbuffer(j) <=> rbuffer0(j)))) OR
    (pc0 = pc AND (request0 <=> request) AND (answer0 <=> TRUE) AND
     (sbuffer(i) <=> TRUE) AND (sbuffer0(i) <=> FALSE) AND
     given = given0 AND waiting = waiting0 AND sender = sender0 AND
     rbuffer = rbuffer0 AND
     (FORALL (j: Index): j /= i => (sbuffer(j) <=> sbuffer0(j))));
```


The RISC ProofNavigator Theory (Contd'5)

```
Next: BOOLEAN =
  ((EXISTS (i: Index):
      RC(pc(i), request(i), answer(i),
         pc0(i), request0(i), answer0(i)) AND
     (FORALL (j: Index): j /= i =>
        pc(j) = pc0(j) AND (request(j) <=> request0(j)) AND
        (answer(j) <=> answer0(j)))) AND
    given = given0 AND waiting = waiting0 AND sender = sender0 AND
    rbuffer = rbuffer0 AND sbuffer = sbuffer0) OR
  (RS(given, waiting, sender, rbuffer, sbuffer,
      given0, waiting0, sender0, rbuffer0, sbuffer0) AND
   (FORALL (j:Index): pc(j) = pc0(j) AND (request(j) <=> request0(j)) AND
      (answer(j) <=> answer0(j)))) OR
  (EXISTS (i: Index):
    External(i, pc(i), request(i), answer(i),
                pc0(i), request0(i), answer0(i),
             given, waiting, sender, rbuffer, sbuffer,
             given0, waiting0, sender0, rbuffer0, sbuffer0) AND
   (FORALL (j: Index): j /= i =>
      pc(j) = pc0(j) AND (request(j) <=> request0(j)) AND
      (answer(j) <=> answer0(j))));
```


The RISC ProofNavigator Theory (Contd'6)

```
% ---------------------------------------------------------------------------
% invariant
% ---------------------------------------------------------------------------
Invariant: (Index->PC, Index->BOOLEAN, Index->BOOLEAN,
            Index0, Index0, Index0, Index->BOOLEAN, Index->BOOLEAN) -> BOOLEAN =
  LAMBDA(pc: Index->PC, request: Index->BOOLEAN, answer: Index->BOOLEAN,
         given: Index0, waiting: Index0, sender: Index0,
         rbuffer: Index->BOOLEAN, sbuffer: Index->BOOLEAN):
    FORALL (i: Index):
      (pc(i) = C OR (sbuffer(i) <=> TRUE) OR (answer(i) <=> TRUE) =>
         given = i AND
         (FORALL (j: Index): j /= i =>
            pc(j) /= C AND
            (sbuffer(j) <=> FALSE) AND (answer(j) <=> FALSE))) AND
      (pc(i) = R =>
         (sbuffer(i) <=> FALSE) AND (answer(i) <=> FALSE) AND
         (i /= given =>
           (request(i) <=> FALSE) AND (rbuffer(i) <=> FALSE) AND sender /= i)
           AND
         (i = given =>
           (request(i) <=> TRUE) OR (rbuffer(i) <=> TRUE) OR sender = i) AND
         ((request(i) <=> FALSE) OR (rbuffer(i) <=> FALSE))) AND
```

The RISC ProofNavigator Theory (Contd'7)

```
(pc(i) = S =>
   ((sbuffer(i) <=> TRUE) OR (answer(i) <=> TRUE) =>
      (request(i) <=> FALSE) AND (rbuffer(i) <=> FALSE) AND sender /= i)
      AND
   (i /= given =>
      (request(i) <=> FALSE) OR (rbuffer(i) <=> FALSE))) AND
(pc(i) = C =>
  (request(i) <=> FALSE) AND (rbuffer(i) <=> FALSE) AND sender /= i AND
  (sbuffer(i) <=> FALSE) AND (answer(i) <=> FALSE)) AND
(sender = 0 AND ((request(i) <=> TRUE) OR (rbuffer(i) <=> TRUE)) =>
  (sbuffer(i) <=> FALSE) AND (answer(i) <=> FALSE)) AND
(sender = i =>
  (sender = given AND pc(i) = R =>
     (request(i) <=> FALSE) AND (rbuffer(i) <=> FALSE)) AND
  waiting /= i AND
  (pc(i) = S AND i /= given =>
     (request(i) <=> FALSE) AND (rbuffer(i) <=> FALSE)) AND
  (pc(i) = S AND i = given =>
     (request(i) <=> FALSE) OR (rbuffer(i) <=> FALSE))) AND
```


The RISC ProofNavigator Theory (Contd'8)

```
(waiting = i =>
   given /= i AND
   pc(waiting) = S AND
   (request(waiting) <=> FALSE) AND (rbuffer(waiting) <=> FALSE) AND
   (sbuffer(waiting) <=> FALSE) AND (answer(waiting) <=> FALSE)) AND
((sbuffer(i) <=> TRUE) =>
   (answer(i) <=> FALSE) AND (request(i) <=> FALSE) AND
     (rbuffer(i) <=> FALSE));
```


The RISC ProofNavigator Theory (Contd'9)

```
% ---------------------------------------------------------------------------
% mutual exclusion proof
% ---------------------------------------------------------------------------
MutEx: FORMULA
  Invariant(pc, request, answer, given, waiting, sender, rbuffer, sbuffer) =>
  NOT(pc(1) = C AND pc(2) = C);

% ---------------------------------------------------------------------------
% invariance proof
% ---------------------------------------------------------------------------
Inv1: FORMULA
  Initial =>
    Invariant(pc, request, answer, given, waiting, sender, rbuffer, sbuffer);

Inv2: FORMULA
  Invariant(pc, request, answer, given, waiting, sender,
    rbuffer, sbuffer) AND Next =>
  Invariant(pc0, request0, answer0, given0, waiting0, sender0,
    rbuffer0, sbuffer0);
```


The Proofs: MutEx and Inv1

```
[z3f]: expand Invariant, IC, IS
  [nhn]: scatter
    [znj]: auto
      [n1u]: proved (CVCL)
```

Single application of autostar.

```
[oas]: expand Initial, Invariant, IC, IS
  [eij]: scatter
    [5ul]: auto
      [uvj]: proved (CVCL)
    [6ul]: auto
      [2u6]: proved (CVCL)
    [avl]: auto
      [cuv]: proved (CVCL)
    [bvl]: auto
      [jtl]: proved (CVCL)
    [cvl]: auto
      [qsb]: proved (CVCL)
    [dvl]: auto
      [xrx]: proved (CVCL)
    [evl]: auto
      [5qn]: proved (CVCL)
    [fvl]: auto
      [fqd]: proved (CVCL)
    [gvl]: auto
      [mpz]: proved (CVCL)
    [hvl]: proved (CVCL)
    [h5h]: auto
      [p3z]: proved (CVCL)
    [i5h]: auto
      [gjb]: proved (CVCL)
    [j5h]: auto
      [4vi]: proved (CVCL)
    [k5h]: auto
      [ucq]: proved (CVCL)
    [l5h]: auto
      [lpx]: proved (CVCL)
```

```
[m5h]: proved (CVCL)
[n5h]: proved (CVCL)
[o5h]: proved (CVCL)
[p5h]: proved (CVCL)
[q5h]: proved (CVCL)
[q5i]: proved (CVCL)
[r5i]: proved (CVCL)
[s5i]: proved (CVCL)
[t5i]: proved (CVCL)
[u5i]: auto
  [1br]: proved (CVCL)
[v5i]: auto
  [roy]: proved (CVCL)
[w5i]: auto
  [i26]: proved (CVCL)
[x5i]: proved (CVCL)
[y5i]: auto
  [wuo]: proved (CVCL)
[z5i]: auto
  [nbw]: proved (CVCL)
[z5j]: auto
  [nbn]: proved (CVCL)
[15j]: auto
  [eou]: proved (CVCL)
[25j]: proved (CVCL)
  [35j]: proved (CVCL)
[45j]: proved (CVCL)
[55j]: proved (CVCL)
[65j]: proved (CVCL)
```

The Proofs: Inv2

```
[pas]: scatter
  [lbh]: expand Next
    [pzi]: split bfv
      [leh]: decompose
        [pkr]: expand RS
          [lpn]: split 5xv
            [pt6]: expand Invariant
              [lcw]: scatter
                [puh]: auto
                  [143]: proved (CVCL)
                ... (20 times)
                [tuh]: proved (CVCL)
                ... (15 times)
            [qt6]: expand Invariant
              [snq]: scatter
                [avi]: auto
                  [cct]: proved (CVCL)
                ... (26 times)
                [gvi]: proved (CVCL)
                ... (6 times)
            [rt6]: scatter
              [zyk]: expand Invariant
                [rvj]: scatter
                  [zgj]: auto
                    [rhd]: proved (CVCL)
                  ... (31 times)
                  [2f3]: proved (CVCL)
                  ... (1 times)
```

```
[st6]: scatter
  [aef]: expand Invariant
    [cwk]: scatter
      [ql6]: auto
        [seg]: proved (CVCL)
      ... (21 times)
      [wl6]: proved (CVCL)
      ... (12 times)
[tt6]: scatter
  [hp6]: expand Invariant
    [twl]: scatter
      [hqv]: auto
        [tbj]: proved (CVCL)
      ... (27 times)
      [nqv]: proved (CVCL)
      ... (6 times)
[meh]: scatter
  [w3z]: expand External
    [3rk]: split lhe
      [g4b]: scatter
        [mdh]: expand Invariant
          [wzf]: scatter
            [3ys]: auto
              [gsh]: proved (CVCL)
            ... (36 times)
```

```
[h4b]: scatter
  [tob]: expand Invariant
    [h1g]: scatter
      [t4i]: auto
        [hpk]: proved (CVCL)
      ... (36 times)
[neh]: scatter
  [4oc]: expand RC
    [nuh]: split nwz
      [4ge]: scatter
        [ney]: expand Invariant
          [45d]: scatter
            [nui]: auto
              [4wr]: proved (CVCL)
            ... (36 times)
          [5ge]: scatter
            [ups]: expand Invariant
              [o6e]: scatter
                [ez5]: auto
                  [5tu]: proved (CVCL)
                ... (36 times)
          [6ge]: scatter
            [21m]: expand Invariant
              [66f]: scatter
                [24u]: auto
                  [6qx]: proved (CVCL)
                ... (36 times)
```

Ten main branches each requiring only single application of `autostar`.